Temporal Reversible Spiking Neural Networks with O(L) Training Memory and O(1) Inference Cost

Jiakui Hu[1*], Man Yao[2*], XueRui Qiu[2], Yuhong Chou[3], Yuxuan Cai[4], Ning Qiao[5], Yonghong Tian[1,6], Bo Xu[2], Guoqi Li[2,#]

[1]Peking University [2]Institute of Automation, Chinese Academy of Sciences (CASIA)
[3]The Hong Kong Polytechnic University [4]01.AI [5]SynSense [6]Peng Cheng Lab

BPTT for Spike Neural Networks Training

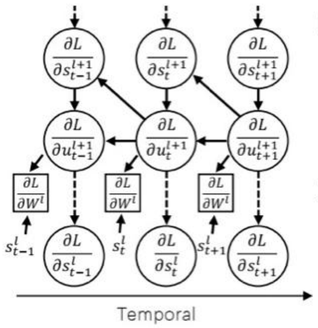

BPTT is commonly used to train **SNNs**.

1. BPTT needs to **retain the activations of all spiking neurons at all timesteps**, the training memory is **O(LT)**.
2. The **temporal gradient is propagated between the two layers of spiking neurons** as shown in the left figure.

Do all neurons deserve temporal gradients?

We calculate the **cosine similarity** between the spatial gradients calculated by baseline (BPTT) and case 1/2.

- The higher the cosine similarity, the closer the gradients obtained during the training process.
- As the gradients become closer, so too do the parameter updates, which results in the parameters learned becoming more similar.

◆ **Case 1. Retain** the temporal gradients of the last layer of spiking neurons in each stage. **Turn other neurons off.**

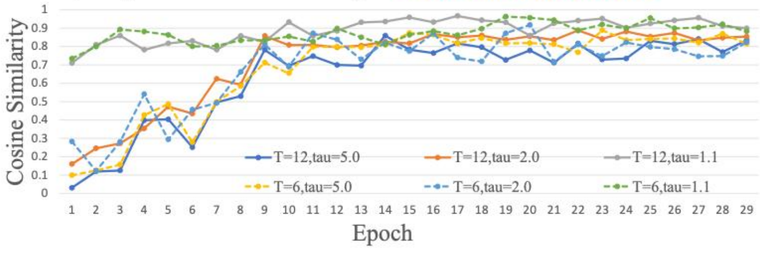

◆ **Case 2. Discard** the temporal gradients of the last layer of spiking neurons in each stage. **Keep this key neuron on!**

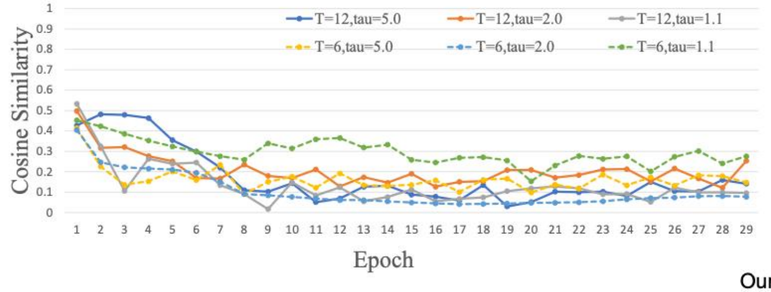

Main Contribution: T-RevSNN with O(L) Training Memory

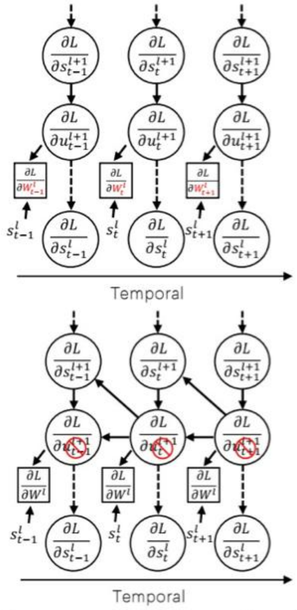

Towards **low training memory, low power, and high performance SNN.**

We have made systematic designs in three aspects to implement the proposed ideas.

Low training memory.

- **Cut off the temporal forward information transfer of non-key spiking neurons;**
- **Multi-level temporal-reversible forward information transfer of key spiking neurons;**

Low power.

- **Group design** of input encoding and network architecture;

High performance.

- Improvements in SNN blocks and residual connections.

Group design of network architecture

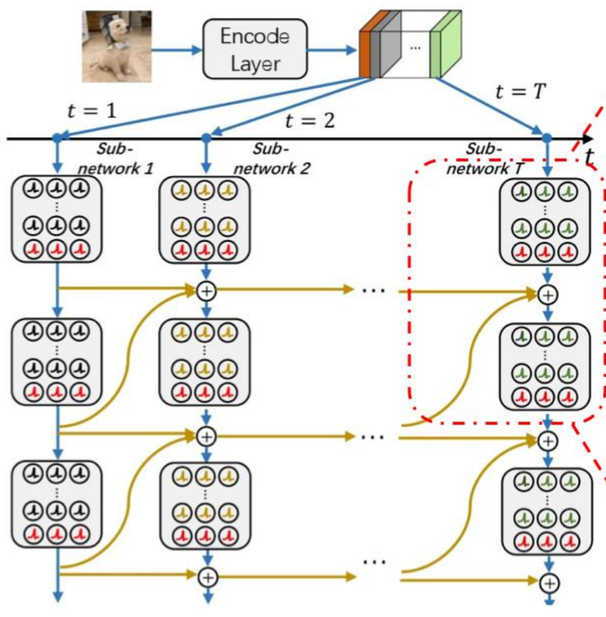

Multi-level temporal-reversible forward of key spiking neurons

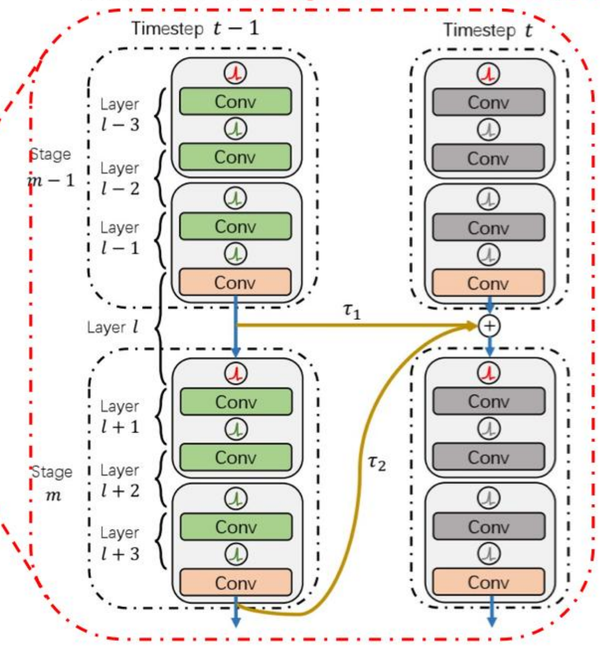

$$V^l[t+1] = (1-\frac{1}{\tau_m})V^l[t] + \frac{1}{\tau_m}\mathbf{W}^l S^{l-1}[t+1],$$

$$V^l[t] = (1-\frac{1}{\tau_m})^{-1}(V^l[t+1] - \frac{1}{\tau_m}\mathbf{W}^l S^{l-1}[t+1]).$$

Accuracy, Training Memory and Inference Energy

1. **SoTA among Spike-CNNs. 5.4% and 3.8% accuracy higher than SEW-ResNet and MS-ResNet;**
2. **Less training memory. 14.3 and 11.7% memory of SEW-ResNet and Spikformer;**
3. **Less inference energy. 24.1% energy of Spikformer.**

Methods	Param (M)	Time step	Training Time (min/ep)	Memory (MB/img)	Energy (mJ)	Acc (%)
STBP-tdBN (Zheng et al., 2021)	21.8	6	29.6	186.1	6.4	63.7
SEW ResNet (Fang et al., 2021a)	25.6	4	10.0	596.9	4.9	67.8
MS ResNet (Hu et al., 2024)	21.8	6	11.2	267.1	5.1	69.4
TEBN (Duan et al., 2022)	21.8	4	16.3	260.1	6.4*	64.3
TET (Deng et al., 2022)	21.8	4	12.5	221.0	4.0*	68.0
Spikformer	16.8	4	14.2	580.8	7.7	70.2
(Zhou et al., 2023)	29.7	4	16.7	767.8	11.6	73.4
Spike-driven Transformer	16.8	4	15.4	548.9	3.9	72.3
(Yao et al., 2023b)	**29.7**	4	18.8	730.0	4.5	**74.6**
OTTT (Xiao et al., 2022)	21.8	6	24.2	84.1	6.0*	64.2
SLTT (Meng et al., 2023)	21.8	6	18.1	71.7	6.0*	66.2
	25.6	6	23.4	117.3	7.2*	67.0
S-RevSNN (Zhang & Zhang, 2024)	24.4	4	7.9	127.1	-	-
	17.2	4	16.3	389.6	-	-
T-RevSNN (This work)	15.2	4	**6.1**	**57.5**	**1.7**	69.8
	29.8	4	9.1	85.7	2.8	**73.2**

Training and Inference Complexity

Training Methods	Training		Inference
	Memory	Time	Energy
STBP (Neftci et al., 2019)	$\mathcal{O}(LT)$	$\mathcal{O}(LT)$	$\mathcal{O}(T)$
OTTT (Xiao et al., 2022)	$\mathcal{O}(L)$	$\mathcal{O}(LT)$	$\mathcal{O}(T)$
SLTT-K (Meng et al., 2023)	$\mathcal{O}(L)$	$\mathcal{O}(LK)$	$\mathcal{O}(T)$
S-RevSNN (Zhang & Zhang, 2024)	$\mathcal{O}(T)$	$\mathcal{O}(T)$	$\mathcal{O}(T)$
T-RevSNN turn-off (Ours)	$\mathcal{O}(L)$	$\mathcal{O}(L)$	$\mathcal{O}(1)$
T-RevSNN turn-on (Ours)		$\mathcal{O}(T)$	

Our codes and trained model weights are available at https://github.com/BICLab/T-RevSNN.

Contact us!